relcross door controls®
distributors of ANSI grade & CE marked commercial door hardware

PS01.N - 12 V DC - 2.0 Amp Installation Instructions

INSTALLATION WARNING – This equipment MUST BE EARTHED and supplied from a switched fused 3A spur on 30mA RCD mains protection
The enclosure must be fixed internally on a vertical flat surface at a maximum ambient temperature of 45 degrees in a well ventilated area unit weighs 4kg. This power supply must be installed in accordance with the Wiring Regulations BS7671 Installation by qualified personnel, precluding use by persons (including children) with reduced physical, sensory, or mental capabilities, or lack of experience and knowledge.
230v 50Hz 250VA T1A supply

WARNING DISCONNECT FROM MAINS BEFORE CARRYING OUT ANY WORK

If the supply cord is damaged, it must be replaced by the manufacturer, its service agent or similarly qualified persons in order to avoid a hazard.

Features:

- Two stage current protection.
- Short circuit protection.
- Thermal overload protection.
- Constant voltage regulation.
- Mains failure or low battery voltage warning, user selectable
- Fire relay interface to fire alarm system.
- Enclosure door 3 LED status indicators.
- PCB mounted engineering status LED indicators, show:
  - Over current
  - Fire alarm relay status
- Battery management electronics providing:
  - Low voltage trip to disconnect battery and extend battery life.
  - Reverse battery polarity protection.

Description:

First stage current protection
If the load exceeds the power supply current rating, an electronic sensor detects this overload and folds the voltage back to 11.5 volts and provides current limiting, this is indicated by the red overload LED on the circuit board.

Second stage current protection
A short circuit or severe overload will shut down the regulator & output voltage will be zero until the fault is removed.

Battery management, if battery fitted
Under normal conditions, the battery floats at 13.8 Volts. If the mains power fails, the battery takes the load. Eventually the voltage will drop to 10.5 volts & a relay disconnects the battery, this is automatically reset once the mains has been re-energised. This feature extends battery life by preventing deep discharging and prevents equipment malfunction.

User selectable warning voltage free relay contacts
The electronic voltage detection circuit is configured by selecting a link switch on the PCB for either: MF - Mains failure or LB - Low battery 11.5 volts .

Fire control relay
Terminals FR & FR (Fire relay) can be connected to a voltage free fire system and or access control system. Relay operation is indicated via the external yellow LED. If the fire relay is used, the positive supply is from either +NC (normally closed) and/or +NO (normally open) depending on desired relay operation.

Relcross Door Controls® | Hambleton Avenue | DEVIZES | Wiltshire | SN10 2RT | UK
T: +44(0)1380 729600 | E: sales@relcross.co.uk | www.relcross.co.uk

Cabinet dimensions in mm 325H * 255W * 90D Weight 4.3kg all 4 fixing holes to be used

Fixings holes
There are four fixing holes in each corner of the cabinet, all 4 are to be secured to a vertical platform unit is 4.3kg

Gland knockouts

The cabinets have laser cut, easy pop 20mm gland holes for 20mm compression glands:
Top location- D.C I/P O/P Lower left side location-MAINS I/P

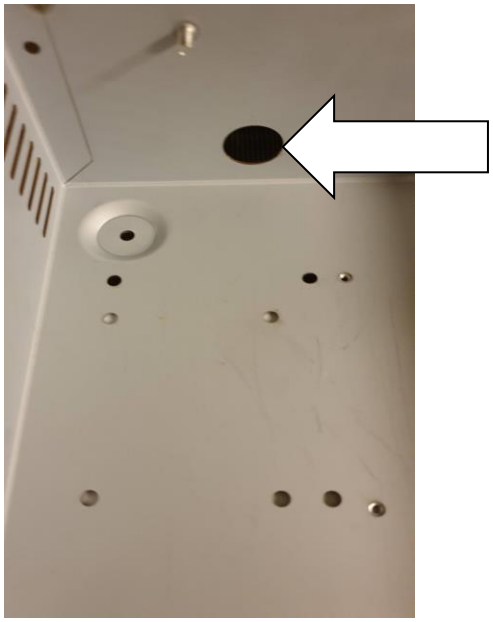

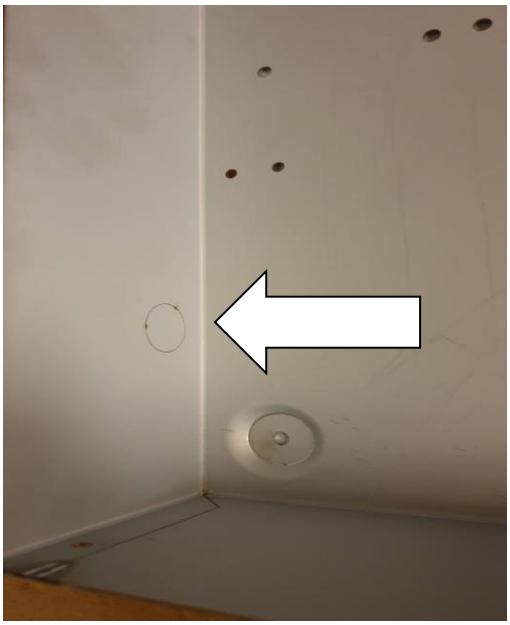

Commissioning tests Initial

installation test

Prerequisites:

Disconnect battery – if supplied with battery
Disconnect all supplied equipment
Place the handbag link to LB low battery (on PCB).

Test procedure

Switch on mains power; the following indicators should be illuminated:

- Red and Green – on the front panel
- Green on the PCB

Fire alarm relay
Switch off mains power & connect a link between terminals FR & FR
Switch on mains power – the yellow LED on front panel should now be lit,
Connect a meter between terminals 0V & +NO - this should be live at PSU output voltage

Relcross Door Controls® | Hambleton Avenue | DEVIZES | Wiltshire | SN10 2RT | UK
T: +44(0)1380 729600 | E: sales@relcross.co.uk | www.relcross.co.uk

Switch off mains power & remove the link between terminals FR & FR, switch on mains power and connect a meter between terminals 0V & +NO which should be live at PSU output voltage. Observe LEDs switch off in the following sequence: Red then green on PCB then green on front panel last

Battery functionality – optional if fitted
Switch off mains power & connect the battery, place handbag link to MF (mains failure) switch on mains power, then switch off. The power supply is now running on the battery, note the green LED on PCB will be off but the green LED on the front panel will be on. The relay contacts WNO to WNC will change over

Tests with the load connected – battery not connected (if supplied): With the load connected, switch on the mains. The following LEDs should be on: red & green on front panel, green on PCB and yellow if using relay FR, this indicates the test & the power supply loading is correct.

If only the red LED is illuminated there is a short circuit with the load connected. If red, & green on the front panel with green and red (over load) on the PCB illuminated the connected load has exceeded the power supply rated output & must be reduced.

Front panel LED	PCB LED	Means
Red + Green	None	Normal operation
Red + Green + Yellow	None	Normal operation with fire relay energised
Green	Green if MFW *	Power supply on battery
Green + Yellow	Green if MFW *	Power supply on battery with fire relay energised
Red only	None	Dead short on output
Red + Green	Red	Current rating exceeded

* MFW – mains failure warning if configured

Relcross Door Controls® | Hambleton Avenue | DEVIZES | Wiltshire | SN10 2RT | UK
T: +44(0)1380 729600 | E: sales@relcross.co.uk | www.relcross.co.uk

Connections Beldon Cable is not recommended only multi-strand d.c cable suitable for loads and locations

Positive and negative is supplied from +NS & 0V for fire alarm and relay connection options see diagrams below

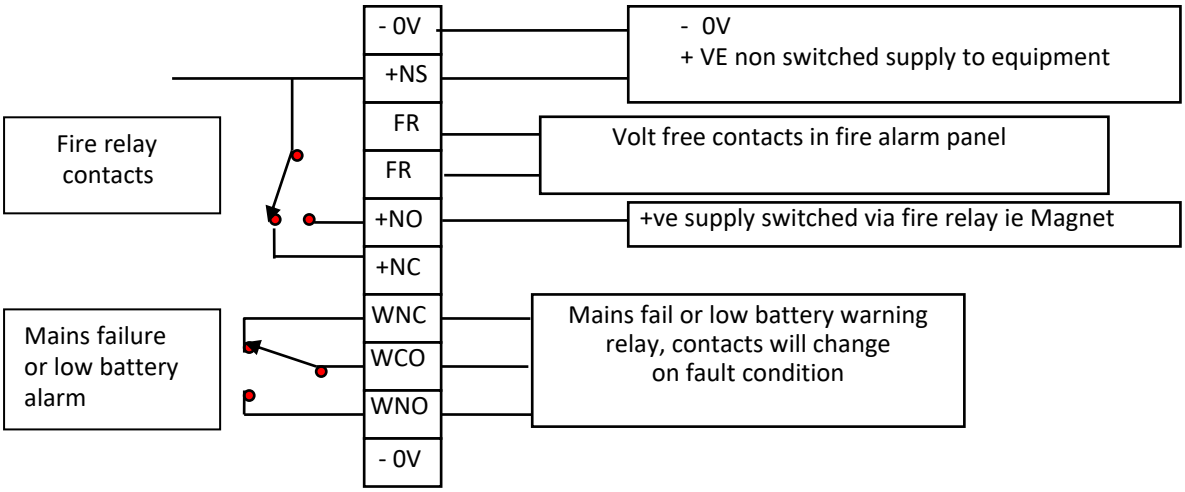

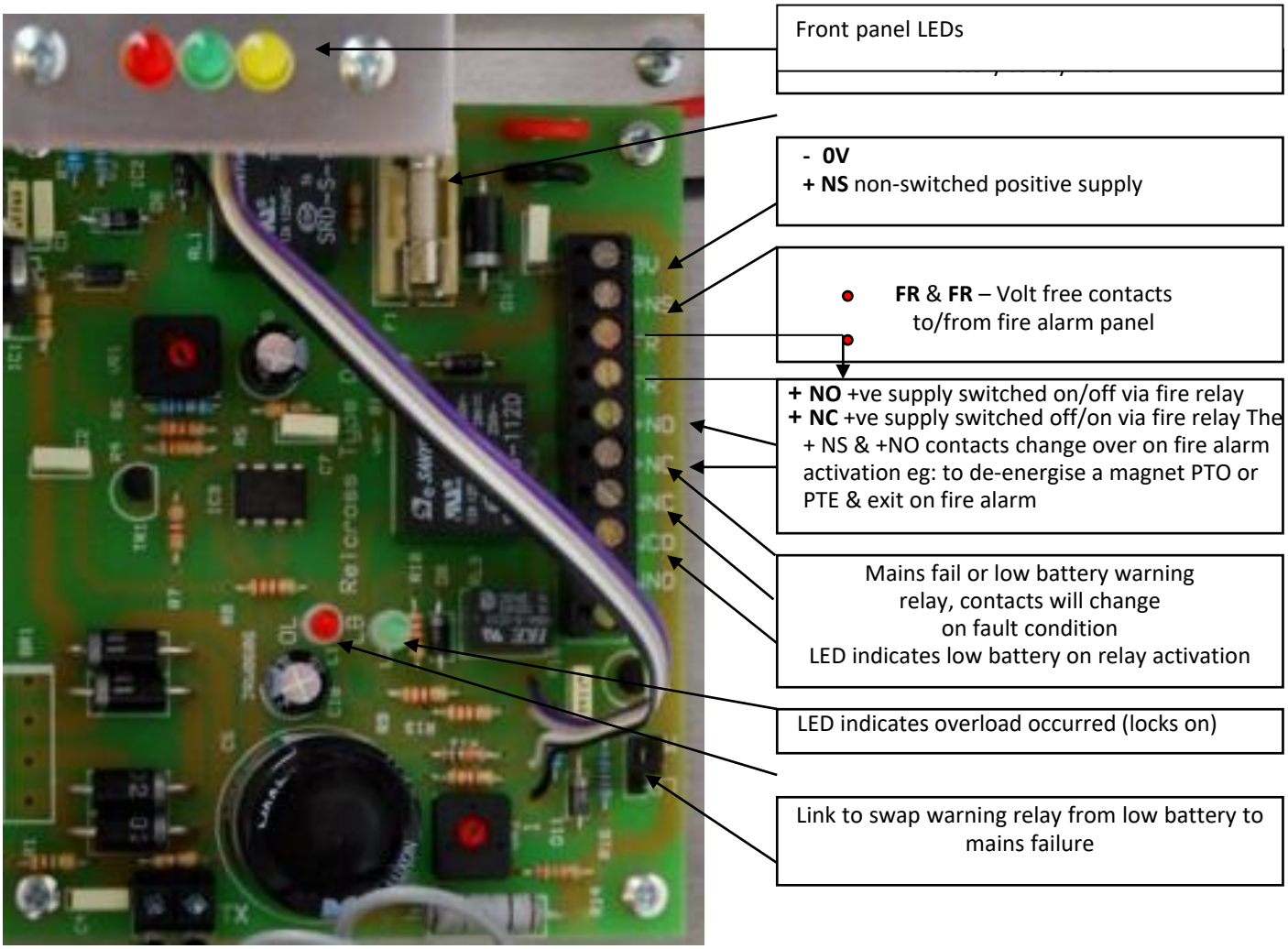

Relcross Door Controls® | Hambleton Avenue | DEVIZES | Wiltshire | SN10 2RT | UK
T: +44(0)1380 729600 | E: sales@relcross.co.uk | www.relcross.co.uk